HELOS | RODOS & Co. | Laser Diffraction

Particle Measurement | Laboratory

Size and Distribution | < 0.1 µm to 8,750 µm

Technical Specifications

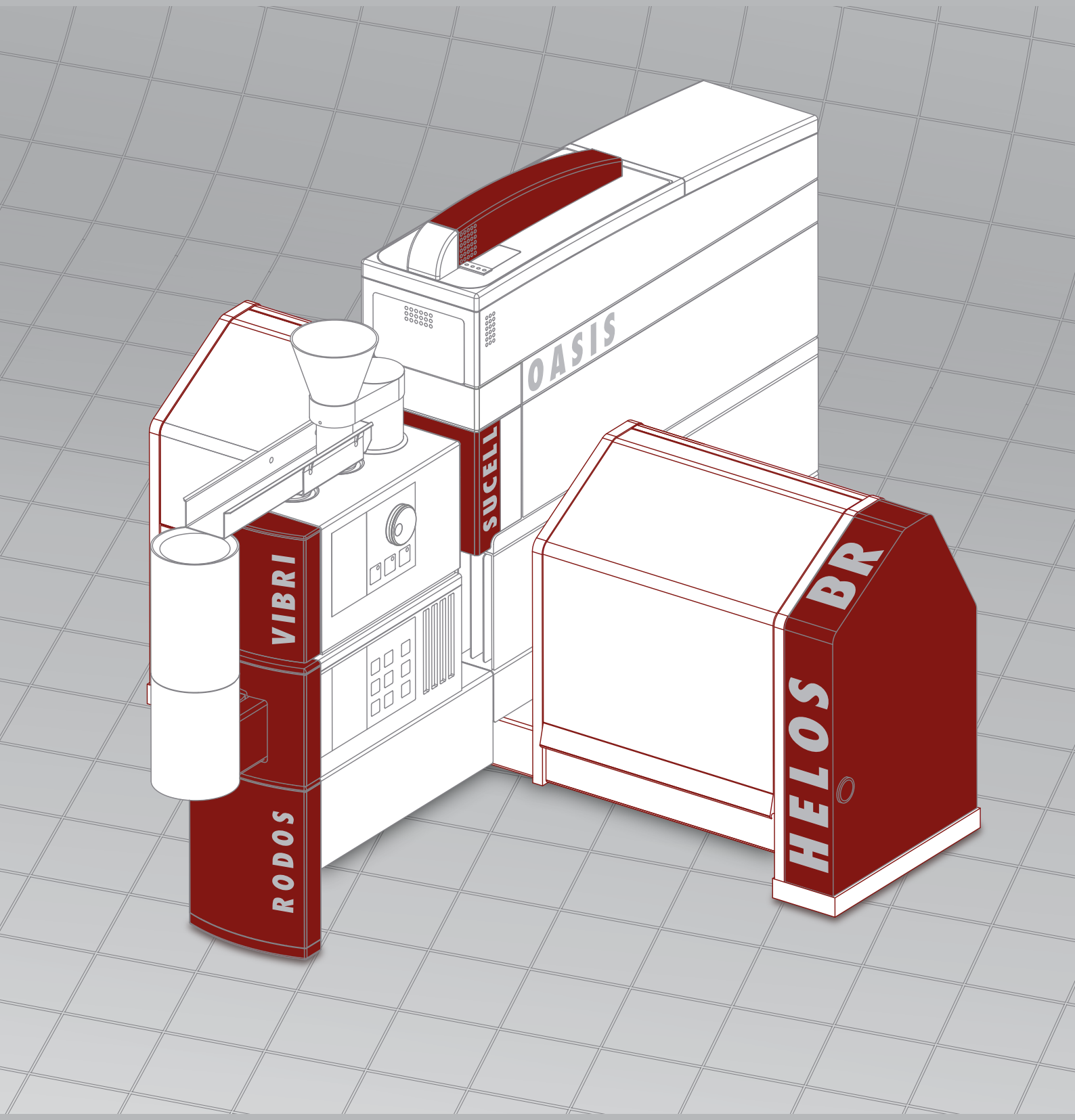

Sympatec develops, manufactures, sells, services and supports a range of best instruments for particle size and shape analysis in laboratory and process applications for customers worldwide. With continuous innovations Sympatec makes a prominent contribution to ❯ laser diffraction, ❯ dynamic image analysis, ❯ ultrasonic extinction and ❯ dynamic light scattering.

Technical Specifications

Modular Laser Diffraction Sensor for Particle Size Analysis

Sensor

Label	HELOS/BR	HELOS/KR[1]	HELOS/KR-Vario[2]
Overall measuring range	0.1 – 875 µm	0.1 – 8,750 µm	0.1 – 8,750 µm
Measuring range modules	5	8	8

Measuring principle

Laser diffraction	Forward scattering in parallel beam
	– classic optical Fourier set up (ISO 13320)
	– open measuring zone offering unique working distance

Light source

Helium-neon laser	λ = 632.8 nm (red), $P_{out} \leq$ 5 mW	
Laser class	3R with open dispersion units	
	1 with closed dispersion units	
Beam diameter	Automatic adjustment to measuring range	
	R1 / R2	2.2 mm
	R3 / R4(T) / R5(T)	13.0 mm
	R6T / R7T	26.0 mm
	R6T / R7T / R8T	35.0 mm

Measuring ranges and optics

Discrete measuring ranges with highest precision and resolution[3].

		Focal length	$x_{min, CLmin}$ | x_{CLmax}* – x_{max}
HELOS/BR	R1	(f=20 mm)	0.10 | 0.18 - 35.0 µm
	R2	(f=50 mm)	0.25 | 0.45 - 87.5 µm
	R3	(f=100 mm)	0.50 | 0.90 - 175.0 µm
	R4T	(f=200 mm)	0.50 | 1.80 - 350.0 µm
	R5T	(f=500 mm)	0.50 | 4.50 - 875.0 µm
HELOS/KR	R1	(f=20 mm)	0.10 | 0.18 - 35.0 µm
HELOS/KR-Vario	R2	(f=50 mm)	0.25 | 0.45 - 87.5 µm
	R3	(f=100 mm)	0.50 | 0.90 - 175.0 µm
	R4	(f=200 mm)	0.50 | 1.80 - 350.0 µm
	R5	(f=500 mm)	0.50 | 4.50 - 875.0 µm
	R6T	(f=1,000 mm)	0.50 | 9.00 - 1,750.0 µm
	R7T	(f=2,000 mm)	0.50 | 18.00 - 3,500.0 µm
	R8T	(f=5,000 mm)	0.50 | 45.00 - 8,750.0 µm

* Values indicate lower | upper limits of first class.

Typical measuring range combinations		
Triple lens holding disc	R2 | R4 | R6T	0.25 | 0.45 - 1,750.0 µm
Quad lens holding disc	R1 | R3 | R5 | R7T	0.10 | 0.18 - 3,500.0 µm

Detector and data acquisition

Multi-element detector	31 semi-circular segments (180°) for orientation-independent characterisation of even irregular shaped particles			
	3 centre elements for precise autofocus prior to every measurement and for continuous monitoring of optical concentration during measurement			
Acquisition rate	2,000 diffraction patterns per second			
Raw data recording	in up to 248 intensities			
Typical measuring times	Distribution width	Measuring time[4]	Sample amount[4]	Standard deviation[5]
minimum	narrow[6]	< 10-100 ms	< 10-100 mg	< 1.0-1.5 %
	normal[7]	< 0.1-1 s	< 0.1-1 g	< 1.5 %
	wide[8]	< 1-10 s	< 1-10 g	< 2.0-2.5 %
recommended	narrow[6]	1-3 s	< 0.1-2 g	< 1.0-1.5 %
	normal[7]	2-10 s	< 1-10 g	< 1.0-1.5 %
	wide[8]	5-30 s	< 10-100 g	< 1.5-2.0 %
	If continuous sample feeding is granted, sample amount as well as measuring time is virtually unlimited. In doing so, maximum standard deviation of three consecutive measurements always remains below 2.5 %.			

Evaluation modes

FREE	Fraunhofer Enhanced Evaluation (Fraunhofer diffraction, parameter free)
MIEE[20]	Mie Extended Evaluation (Mie Scattering, deploying the complex refractive index)
Combination of measuring ranges[20]	Automatic combination of up to 4 high-resolution measuring ranges capturing wide distributions (ratio x_{90}/x_{10} > 1,000)[9]
	Calculation of an aggregated particle size distribution with up to 57 size classes out of a maximum of 124 independent observations.

Quality of measuring results

Accuracy*	σ < 1 %	mean relative standard deviation to absolute value (x_{10}...x_{90})
Repeatability[10]	σ < 0.04 %	typical, wet measurement[11]
	σ < 0.3 %	typical, dry measurement[12]
Comparability[13]	σ < 1 %	mean relative standard deviation of median (x_{50})
	$\lvert\Delta x_{50}\rvert$ < 2.5 %	maximum relative deviation

* Evaluation of a picket fence distribution

1) For special applications also available with open measuring zone of doubled width (HELOS/KR+) for inclusion of up to two dispersing units. 2) Open and variable measuring zone. R8 with gravity disperser GRADIS only. 3) User defined configuration of up to four precision lens modules per lens holding disk. 4) By tendency, lower values apply to finer, upper values to coarser particulate systems, respectively. Stated amounts valid for densities up to 2 g/cm³.

5) Maximum standard deviation in any size class of three consecutive measurements (repeatability). Sample splitting error < 0,5 %. 6) x_{min} ... x_{max}: 1 decade (e.g., 1 ... 10 µm). 7) x_{min} ... x_{max}: 2 decades (e.g.,1 ...100 µm). 8) x_{min} ... x_{max}: more than two decades (e.g., 1 ... 1,000 µm). 9) Using a single lens holding disc. By using another lens holding disc further measuring ranges may be added. 10) The given values are valid for measurements with reference material SiC P600 related to the

Adaptable Dispersion Units

for Powders, Granules, Aerosols, Sprays, Inhalants, Suspensions, Emulsions, Bubbles, Gels, ...

Dispersing Units and Feeder[14]

Dry[15]

	Dispersing range	Sample amount per analysis
RODOS	< 0.1 - 3,500 µm	< 1 mg - 1,000 g
Injection disperser for finest, even cohesive powders		
GRADIS	0.5 - 8,750 µm	10 - 1,000 g
Gravity disperser for coarser, even fragile particulate systems		
VIBRI[16]	< 0.1 - 15,000 µm	1 mg - 1,000 g
vibratory feeder for precise dosing and feeding of dry particulate systems		
ASPIROS[16]	< 0.1 - 875 µm	< 1 mg - 1 g
micro dosing system for feeding small amounts of precious or toxic dry substances in encapsulated sample vials[17]		

Dry and wet

OASIS		
Combines RODOS	< 0.1 - 3,500 µm	< 1 mg - 1,000 g
and SUCELL;	0.1 - 1,750 µm	500 ml
small volume adapter (SVA)[20]		50 ml
VIBRI or ASPIROS for feeding of dry samples[16]		

Wet[18]

	Dispersing range	Analysis volume
SUCELL		
Closed loop flow-through cell for suspensions and emulsions;	0.1 - 1,750 µm	500 ml
built-in sonication (0-72 W); small volume adapter (SVA)[20]		50 ml
QUIXEL	0.1 - 3,500 µm	300 - 1,000 ml
Closed loop flow-through cell for suspensions and emulsions, even with coarser, high density particles; built-in sonication (0-72 W); heatable[20]		
CUVETTE	Module integration platform	
For small quantities of precious suspensions and emulsions		
SYSIPHUS Circulation cell* | Stainless steel	0.1 - 875 µm	50 ml
CUVETTE 50 Stand cell* | Quartz glass	0.25 - 3,500 µm	50 ml
* With sonication and magnetic stirrer		
CUVETTE 6 Stand cell** | Quartz glass	0.1 - 87.5 µm	6 ml
** Smallest volume with manual stirrer		

Sprays and Inhalants

SPRAYER	0.25 - 875 µm	1 dose
Adapter for nasal and pharyngeal pump sprays with **SMACTOR**[19] actuator		
SMACTOR[19]	0.25 - 1,750 µm	1 dose
Actuator with universal rack for flexible spray applications		
INHALER	0.25 - 1,750 µm	1 dose
Vacuum controlled adapter for aerosol analysis of DPIs, MDIs and nebulizers		


RODOS


GRADIS


RODOS/L

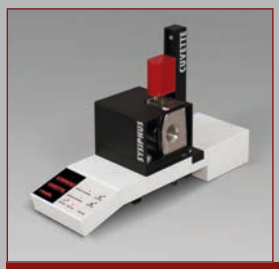
CUVETTE


SUCELL


OASIS

x_{50}-value. 11) Repeated wet measurement of the same sample in closed-loop SUCELL. 12) Repeated dry measurement of riffled sample with RODOS. 13) System-to-system reproducibility. 14) Stated size ranges are application dependent. 15) Recommended optical concentration for particle size analysis with dry dispersing units: c_{opt}=5-15 %, ideally c_{opt}=8-12 %. 16) RODOS and GRADIS typically with dry feeding unit VIBRI. Feeding of RODOS with ASPIROS, alternatively. 17) When using hazardous or toxic substances, additional safety measures must be taken by the operator at the installation site. 18) Recommended optical concentration for particle size analysis with wet dispersing units: c_{opt}=15-25 %. 19) With force and trajectory mode; stroke length: 1 - 20 mm, force; 10 - 70 N, maximum velocity: 10 - 250 mm/s. 20) Optional.

The Modular Classic

Systems for Particle Size Analysis

Sensors | Dispersers | Evaluation | Quality

Quality assurance system	
Certification	Standardised test procedure
Reference material	SiC-F1200 (x_{50} ≈ 4.5 µm)
	SiC-P600 (x_{50} ≈ 27 µm)
	SiC-P80 (x_{50} ≈ 260 µm)
	SiC-P50 (x_{50} ≈ 430 µm)
Validation	according to FDA regulations

Software	
PAQXOS	PC or remote control of application in terms of
Control and evaluation	sensor, dispersing units and sample feeding
software for particle	Evaluation
size analysis	– Fraunhofer Enhanced Evaluation (FREE)
	– Mie Extended Evaluation (MIEE)[20]
	– mean values and standard deviations
	– combination of measuring ranges[20]
	Presentation of results based on user defined
	reports and templates
	– diagrams (distribution curves, trend graphs)
	– tables
	– characteristic values
	Powerful programming interface for scripting
	and customized applications
	Facilitated processing control
	Step-by-step wizard for quick and successful
	measurements
	Intuitive SOP management
	User-friendly, individual user interface

Compliance	
ISO 13320	The ISO standard requirements concerning
	"Particle size analysis – Laser diffraction methods"
	are met or even partially exceeded.
FDA 21 CFR Part 11	The compliance to FDA rule standards concerning
	electronic records and electronic signatures is
	provided.

System specifications			
	HELOS/BR	HELOS/KR	HELOS/KR-Vario
Dimensions (L/W/H) mm	705/279/322	1,102/279/322	2,020/279/501
Measuring zone mm	123	123	123 to 1,400
			variable
Weight kg	30	35	70
Supply voltage	90 - 250 V AC @ 50-60 Hz		
Power consumption	Standby	0.1 W	
	Laser mode	31 W	
	Ready	43 W	
Compressed air[21]	Supply	max. 6 bar | ISO 8573-1 Class 3	
	Consumption	typical 200 l/min | max. 300 l/min	
Extraction[22]	Application dependent industrial extraction unit		

Computer specifications	
Operating system[23]	Microsoft® Windows® 10 Professional (64 Bit)
Hardware specification[24]	Up-to-date desktop PC,
	e.g., Intel® Core™ i7, min. 3.6 GHz, 8 GB RAM, 8 MB
	Cache, SSD PCIe 512 GB, Intel® HD Graphics 630
	(integrated), DVD±RW
Display	27" Full HD (2,560 x 1,440 px)
Interfaces	Ethernet LAN connection (100 MBit/s)

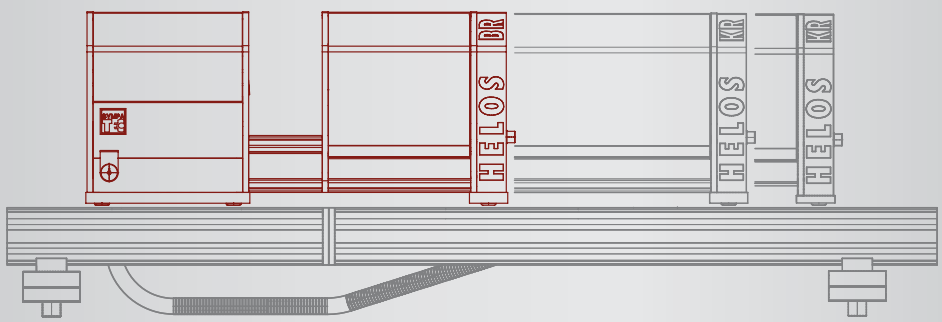

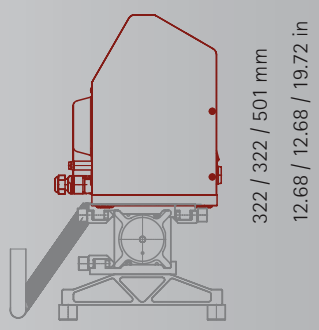

BR / KR / KR-Vario	705 / 1,102 / 2,020 mm	27.76 / 43.68 / 79.52 in	279 mm	10.98 in

Dimension sheet

21) Required in conjunction with injection disperser RODOS (resp. OASIS). 22) Required in conjunction with dry dispersers RODOS (resp. OASIS) and GRADIS. 23) Microsoft® Windows® 7 Professional (64 Bit) supported.
24) Sympatec reserves the right to supply equivalent or better specified personal computers.

Sympatec GmbH - System | Partikel | Technik
Am Pulverhaus 1, 38678 Clausthal-Zellerfeld, Germany

Contact +49 5323 717 0 or sales@sympatec.com